LED LAMP

FYL-48D3VRC1C

Features:

- High instensity
- General purpose leads
- RoHs Complant.

Descriptions:

- Dice material: InGaN.
- Emitting Color: Pink.
- Device Outline: Φ4.8mm helmet Type..
- Lens Type: Water clear.

Radiation pattern.

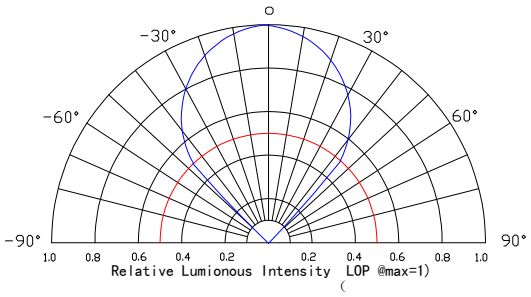

Package configuration

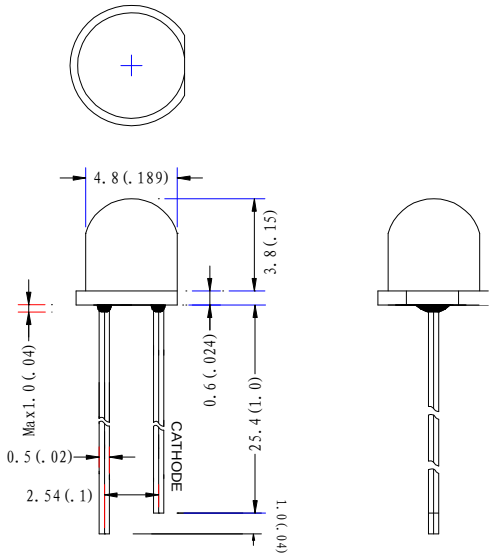

- All dimensions are millimeters (inches)
- Tolerance is ±0.25mm(.010") unless otherwise noted.

Absolute maximun ratings(Ta=25 ˚c)

Parameter	MAX.	Unit
Power Dissipation	70	mW
Peak Forward Current (1/10 Duty Cycle, 0.1ms Pulse Width)	100	mA
Continuous Forward Current	20	mA
Derating Linear From 50℃	0.4	mA/℃
Reverse Voltage	5	V
Electrostatic Discharge (ESD)	500	V
Operating Temperature Range	-30℃ to +80℃	
Storage Temperature Range	-40℃ to +100℃	
Lead Soldering Temperature[4mm(.157") From Body]	260℃ for 5 Seconds	

Electrical and optical characteristics(Ta=25 ˚c)

Parameter	Symbol	Min.	Typ.	Max.	Unit	Test Condition
Luminous Intensity	I_V	–	500	–	mcd	I_F=20mA
Viewing Angle	$2\theta_{1/2}$	80	90	100	Deg	
Ch	X		0.40			
	y		0.20			
Forward Voltage	V_F	2.8	3.2	3.6	V	
Reverse Current	I_R			20	μA	V_R=5V

Typical Electrical Characteristics Curves
(25 ˚c Ambient Temperature Unless Otherwise Noted)

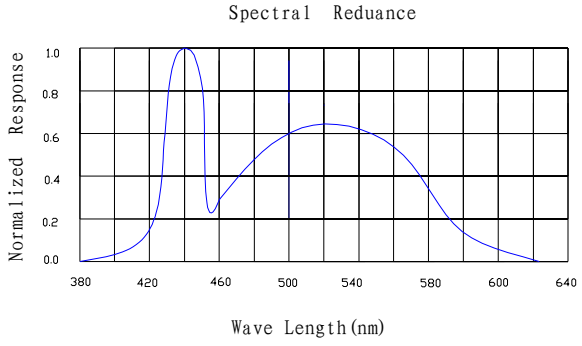

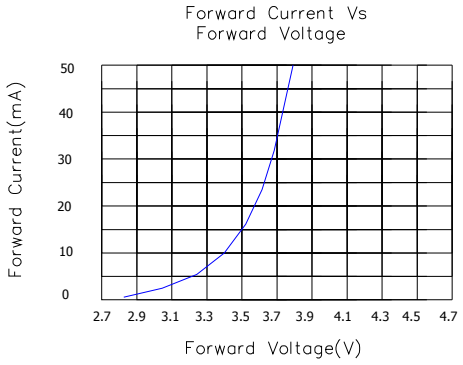

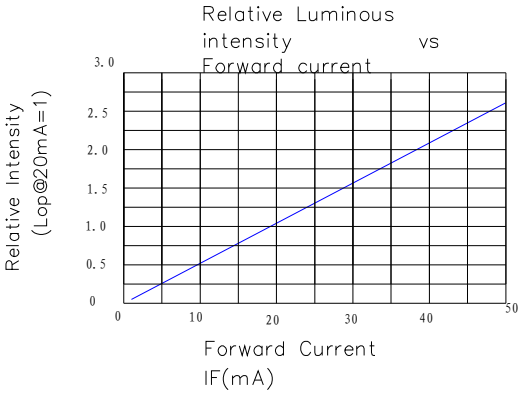

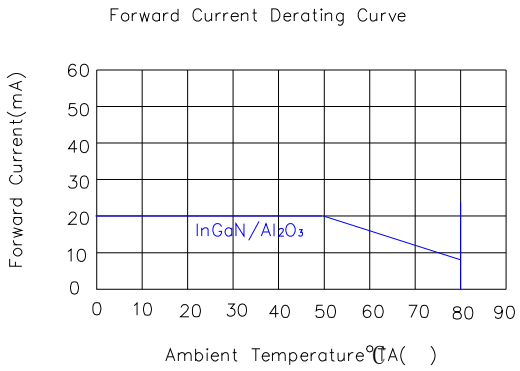

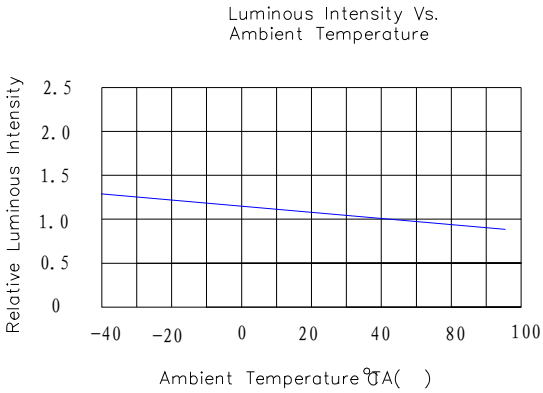

LED LAMP

LAMP PACKING.

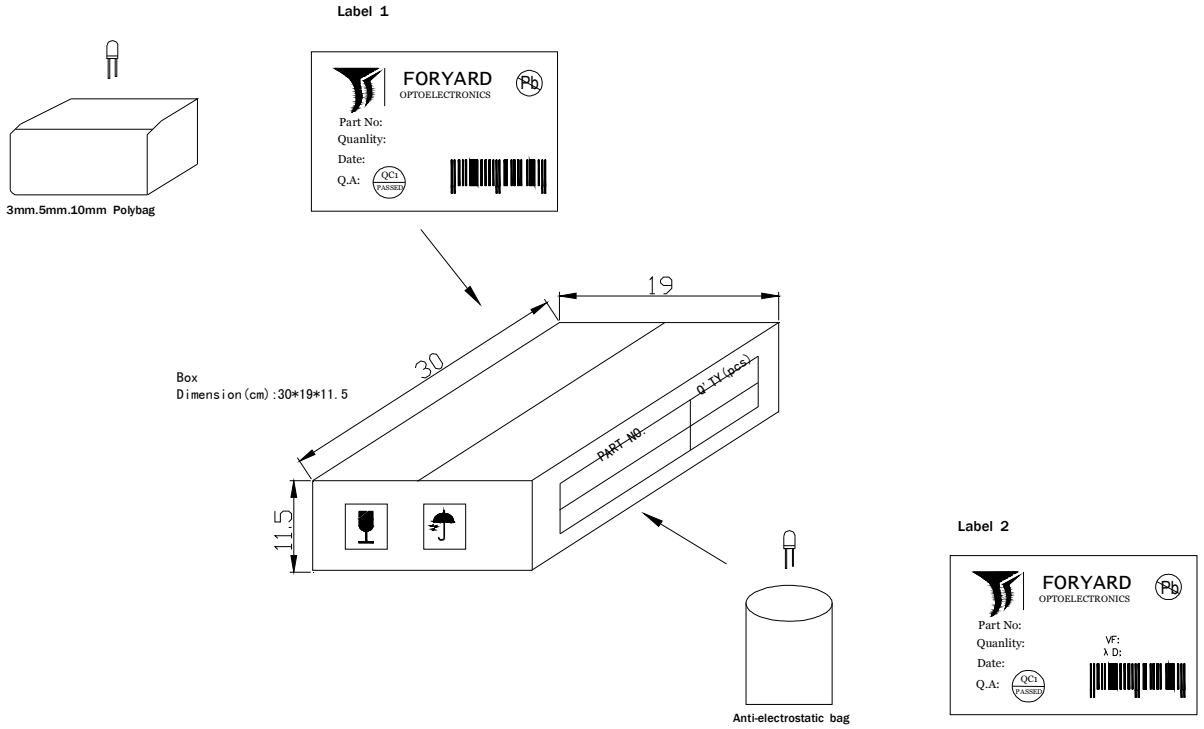

DEVICE	QTY/polybag(pcs)	Polybag/box A	Fig
5mm(T-1 3/4)	1000	8 bags	Label 1
3mm(T-1)	1000	10 bags	Label 1
10mm(T-1)	250	8 bags	Label 1
Blue/Green/White	500pcs	8 bags	Label 2

CARTON
Dimension(cm):39*32*38

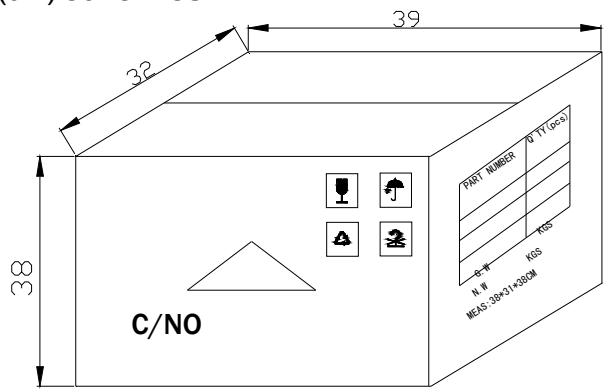

6 Boxes/Carton
5mm:48,000pcs
3mm:60,000pcs
10mm:12,000pcs
Blue/Pure Green/bluish Green /White:24,000pcs